Initial analysis of OECD's discussion draft, branch mismatch structures, BEPS Action 2

On August 22, 2016, the Organisation for Economic Co-operation and Development ("OECD") released for public discussion a draft report that identifies and analyzes mismatches in tax outcomes that can arise through the use of branch structures (the "Branch Mismatch Report"). The Branch Mismatch Report was issued as part of Action 2 of the base erosion and profit shifting ("BEPs") action plan and sets out preliminary recommendations for rules to be enacted into domestic law to neutralize the mismatches arising from the use of certain branch structures identified in the report ("branch mismatches"). Due to similarities between branch mismatches and mismatches involving hybrid entities, the rules recommended by the Branch Mismatch Report are described as extensions of, or analogous to, recommendations contained in the OECD's Report on Neutralising the Effects of Hybrids Mismatch Arrangements (the "Action 2 Report"), released in 2015.

The Branch Mismatch Report identifies five types of branch mismatch arrangements:

a) Disregarded branch structures;
b) Diverted branch payments;
c) Deemed branch payments;
d) Double deduction ("DD") branch payments; and
e) Imported branch mismatches.

Most of these types of mismatches were not addressed in the recommendations of the Action 2 Report, because technically they are not the result of hybridity in the treatment of an entity, instrument, or transfer. The mechanics and tax outcome of the branch mismatch arrangements, however, are similar to the mismatches targeted in the Action 2 Report, and draft legislation in the UK to implement the recommendations of the Action 2 Report also includes a provision dealing with mismatches due to a permanent establishment.

Disregarded branch structures and diverted branch payments are both addressed in section 2 of the Branch Mismatch Report. A deduction / no inclusion ("D/NI") mismatch arises in both of these structures because a payment that gives rise to a deduction in the payor's jurisdiction is not subject to tax in either the branch jurisdiction or the branch owner's jurisdiction. In a disregarded branch structure, the branch jurisdiction does not recognize the existence of the branch and therefore does not subject the payment to tax, while the branch owner's jurisdiction (referred to as the "residence jurisdiction") recognizes the branch and does not tax the payment on the basis that it is allocable to the branch. The Branch Mismatch Report provides the following illustration of a disregarded branch structure.

Disregarded Branch Structure

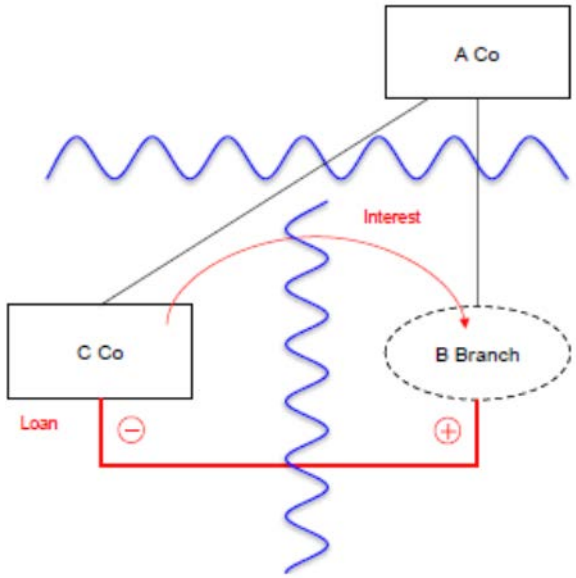

In a diverted branch payment structure, the D/NI branch mismatch arises for a different reason than the disregarded branch structure. Instead of disregarding the branch, the branch jurisdiction views the payment as being made directly to the branch owner while the residence jurisdiction allocates some or all of the payment to the branch. As a result, neither the branch jurisdiction nor the residence jurisdiction taxes the payment. The Branch Mismatch Report provides the following illustration of a diverted branch payment structure.

Diverted Branch Payment

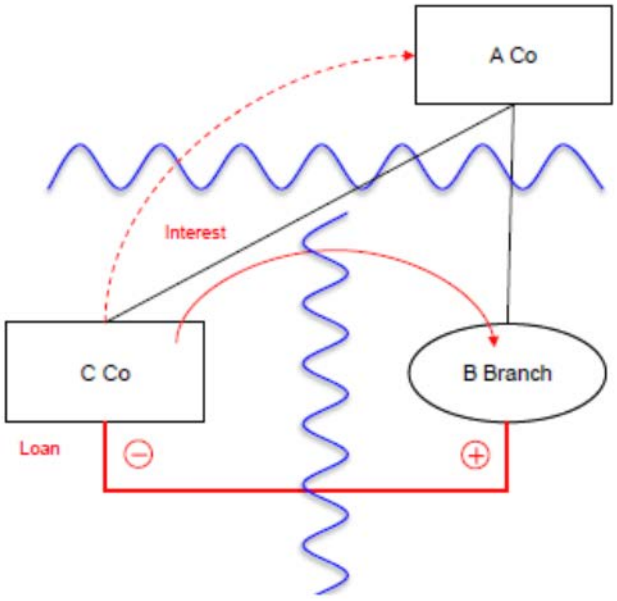

The Branch Mismatch Report analogizes disregarded branch and diverted branch payment mismatches to mismatches involving reverse hybrid entities. It therefore recommends adapting two rules from the Action 2 Report regarding payments to reverse hybrid entities to counteract D/NI mismatches generated by disregarded branch and diverted branch payment structures. First, the Branch Mismatch Report adopts a recommendation in line with Recommendation 5.1 of the Action 2 Report which would eliminate the D/NI mismatch by having the residence jurisdiction treat payments that are disregarded, exempt, or excluded from taxation under the laws of the branch jurisdiction as being received directly by the branch owner in the residence jurisdiction and, therefore, includable in the ordinary income of the branch owner. Additionally, the Branch Mismatch Report recommends the adoption of a recommendation in line with Recommendation 4 of the Action 2 Report providing that the payor jurisdiction (in the above examples, State C) should deny a deduction for a payment made to a disregarded branch or when the payment is a diverted branch payment to the extent that the payment is not included in the ordinary income of the branch or the branch's owner.

KPMG Observation: The Branch Mismatch Report views structures that involve deductible payments made to reverse hybrids and deductible payments made to disregarded branches or that are diverted branch payments as functionally similar. A branch is not an entity or a hybrid. However, the difference between the branch jurisdiction's allocation of the income and the branch owner's could be viewed as a type of hybridity and the tax outcome of these branch structures is similar to the outcome that results from a deductible payment made to a reverse hybrid. As a result, the Branch Mismatch Report views the recommendations described in the Action 2 Report that address mismatches occurring as a result of a payment made to a reverse hybrid as appropriate approaches to address disregarded branch and diverted payment structures.

Deemed branch payments can result in a D/NI outcome if the branch's jurisdiction treats the branch as having made a deductible payment to its owner under transfer pricing, accounting, or other principles of law and such deemed payment is not recognized by the residence jurisdiction. The Branch Mismatch Report provides the following illustration of a deemed branch payment structure, in which B Branch is deemed by its jurisdiction to make a royalty payment to A Co for the use of intangibles, but A Co does not include the deemed payment in income.

Deemed Branch Payment

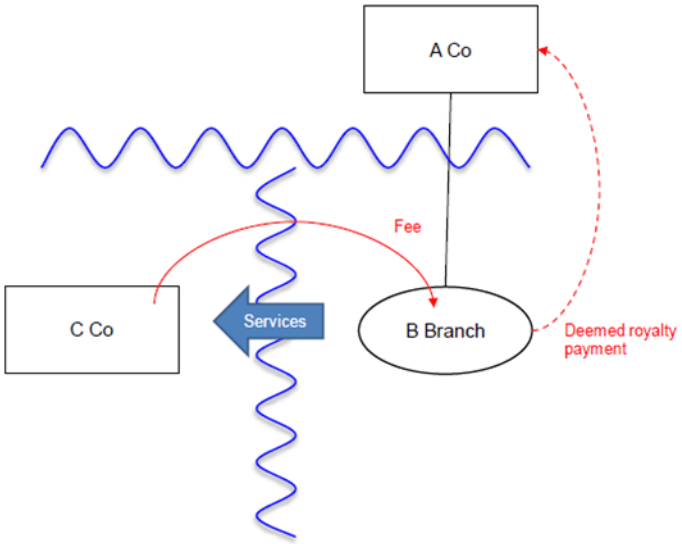

The Branch Mismatch Report notes that this D/NI mismatch is similar to the mismatch that arises in the case of a payment by a disregarded entity to its owner as discussed in Chapter 3 of the Action 2 Report. As with payments made by disregarded payers, the deemed payment of the branch can be used to off-set income of the branch that is not taxable in the residence jurisdiction (*i.e.*, income that is not "dual inclusion income"), which gives rise to a D/NI mismatch. Given this similarity, the Branch Mismatch Report recommends that the mismatch be neutralized in the same manner that the Action 2 Report addresses mismatches arising from payments by a disregarded payer. That is, the branch's deduction with respect to the deemed payment should be denied to the extent that it exceeds dual inclusion income or, if the branch's jurisdiction does not deny the deduction, the branch owner's jurisdiction should require the branch owner to include the deemed payment in ordinary income. (See Recommendation 3 of the Action 2 Report). Deemed or notional payments that represent allocations of third party expenses are not within the scope of this rule, although the Branch Mismatch Report notes that such items could be within the scope of the DD branch payment recommendation.

KPMG Observation: Again, the Branch Mismatch Report has borrowed a recommendation from the Action 2 Report to neutralize the mismatch in the deemed branch payment structure given the similar mechanics and outcomes between a deemed branch payment structure and a hybrid payment structure. Moreover, the proposed deemed branch payment recommendation will, unlike the Action 2 recommendation for hybrid payers, apply to deemed or notional payments. This is necessary because, unlike a hybrid payer structure, no legally recognized payment would be made between the branch and its owner.

A branch double deduction ("DD") mismatch can occur when the rules of the branch jurisdiction and the residence jurisdiction each allow a deduction for a single economic item. The Branch Mismatch Report provides the following illustration of a branch DD structure.

DD Branch Structure

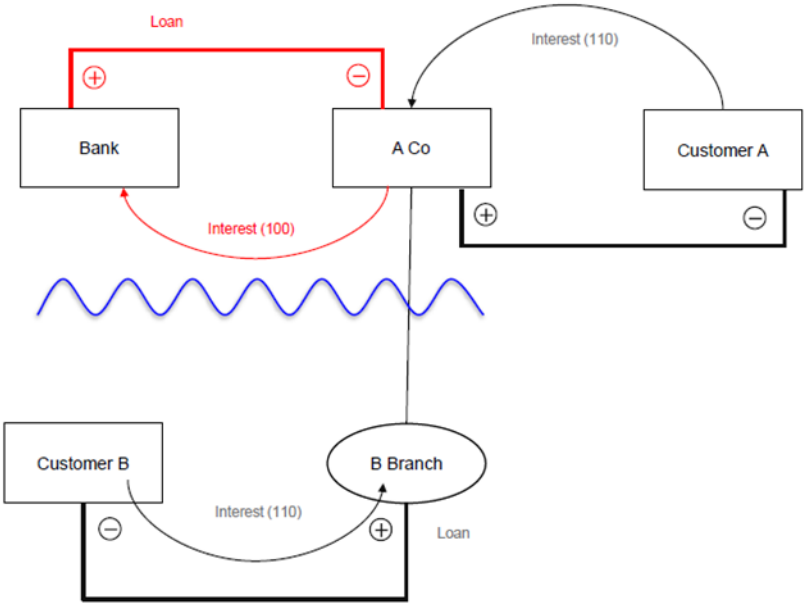

In the example, a DD mismatch arises because the branch jurisdiction allows B Branch an interest deduction of 100 with respect to the Bank loan to A Co under a tracing approach for allocating interest expense; the residence jurisdiction allows A Co an interest deduction of 50 under a fungibility approach for allocating interest expense. Additionally, A Co's jurisdiction does not tax the interest income paid to B Branch by Customer B. Thus, 50 of the 100 of interest expense is deducted twice and constitutes a DD mismatch.

The Branch Mismatch Report notes that while the DD branch structure may not be commonly thought of as involving hybrid entities, such structures have similar mechanics and tax outcomes and that the DD branch structures actually are already included within the scope of the Action 2 Report's recommendations for DD hybrid structures. The Branch Mismatch Report thus recommends applying Recommendation 6 of the Action 2 Report to DD branch structures. The recommended primary response would therefore be to deny A Co's deduction to the extent it does not offset dual inclusion income. Under a defensive rule, Country B should deny B Branch's deduction to the extent necessary to neutralize the DD outcome.

Finally, the report provides for an imported branch mismatch rule which is functionally equivalent to the imported mismatch rule of Recommendation 8 of the Action 2 Report. Like the imported mismatch rule, the imported branch mismatch rule is described as necessary to maintain the integrity of the other recommendations in the Branch Mismatch Report. The Branch Mismatch Report provides the following illustration of a structure in which the imported branch mismatch rule is necessary.

Imported Branch Mismatches

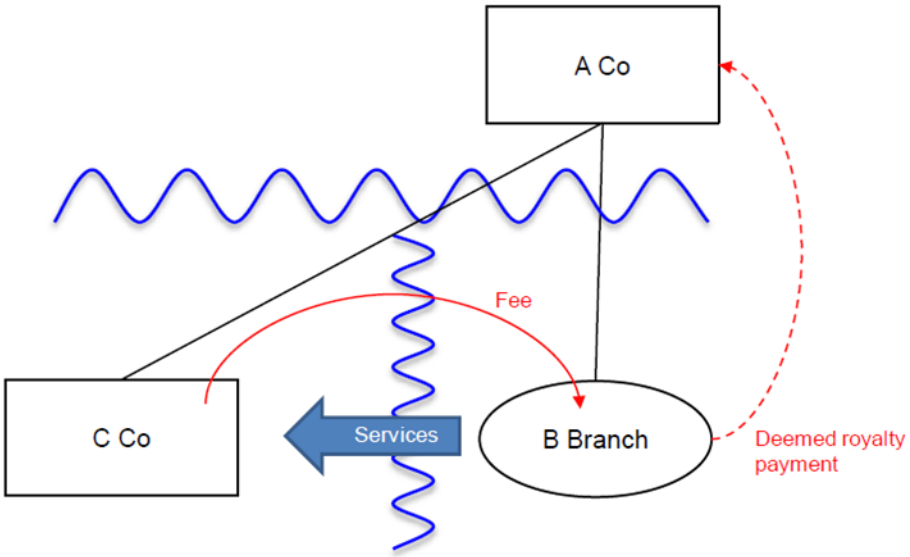

In this example, it is assumed that neither the branch jurisdiction nor the residence jurisdiction has enacted any of the recommendations in the Branch Mismatch Report but that C Co's jurisdiction has enacted such recommendations. Absent the application of the imported branch mismatch rule, the branch mismatch could be "imported" into C Co's jurisdiction through, in this case, a service agreement. The Branch Mismatch Report recommends that C Co's jurisdiction deny its deduction for payments under the Services Agreement because the income of B Branch is offset by a deduction pursuant to a branch mismatch arrangement.

The Branch Mismatch Report requests comments both generally and with respect to specific questions summarized in the Annex to the report. Comments must be submitted by September 19, 2016 at the latest (no extension will be granted) by email to aggressivetaxplanning@oecd.org in Word format. They should be addressed to the International Co-operation and Tax Administration Division, OECD/CTPA.